INSTRUCTION MANUAL

Undercounter Ice Machines - Medium Cube

BIM-120H

BERG UC 120 LB ICE MACH HC S/S

BIM-120F

BERG UC 120 LB ICE MACH FC S/S

BIM-160H

BERG UC 160 LB ICE MACH HC S/S

BIM-160F

BERG UC 160 LB ICE MACH FC S/S

BIM-210H

BERG UC 210 LB ICE MACH HC S/S

BIM-210F

BERG UC 210 LB ICE MACH FC S/S

BIM-280H

BERG UC 280 LB ICE MACH HC S/S

BIM-280F

BERG UC 280 LB ICE MACH FC S/S

This manual contains important information regarding your unit. Please read this manual thoroughly prior to equipment set-up, operation and maintenance. Failure to comply with regular maintenance guidelines outlines in this manual may void the warranty.

WARNINGS

- This appliance is equipped with a three prong grounding type plug for your protection against shock and should be plugged directly into a properly grounded three prong receptacle.
- Do not immerse unit, cord or plug in liquid at any time.
- Unplug cord from outlet when not in use and before cleaning.
- Do not use this unit for anything other than its intended use.
- Do not use outdoors.
- Always use on a firm, dry and level surface.
- Do not use if unit has a damaged cord or plug, in the event the appliance malfunctions, or if the appliance has been damaged in any manner.
- Keep children and animals away from unit.
- Any incorrect installation, alterations, adjustments and/or improper maintenance can lead to property loss and injury.
- All repairs should be done by authorized professionals only.
- Ensure that the designated power supply is adequate for continual usage and the voltage is correct.

**Improper installation, adjustment, alteration, service or maintenance can cause property damage, injury or death. Read the installation, operation and maintenance instructions thoroughly before installing or servicing this equipment.*

UNPACKING THE UNIT

- Check to ensure the shipping carton is not damaged.
- Remove all packing material and make sure all accessories and components are included in the box.

INSTALLATION

1. The unit should be placed in a clean and flat area that has a drain. Minimum clearance for the back of the unit should be at least 8” and 6” on each side. Clearance in front should be at least 12”. This is to allow for proper air discharge from the unit while it’s running. If the minimal clearance on all sides is reduced, ice capacity will be reduced. For best results, do not install next to heat producing appliances.
2. The ambient temperature where this unit is going to be installed should have a minimum of 40°F and a maximum of 100°F.
3. Check the connection, voltage and safety grounding after installation.
4. Installation should be performed by a professional technician only.

ELECTRIC CONNECTION:

1. This unit has a 115 volt NEMA 5-20P electrical connection. Please ensure proper voltage where installed.

WATER PIPE CONNECTION:

This unit comes with all of the hoses and external water filter needed for your connection.

1. Connect your main water line to the external water filter.
2. Using the hose supplied, connect it to the 3/8” FPT water inlet connection at the top of the unit and then connect to external water filter.
3. Using other supplied hose, connect to the 5/8” FPT drain pipe connection and route that hose to the your floor drain.
4. For ice bin, attach drain hose to rear bin connection and route the hose to your floor drain.

Please note: Cube ice machines use more water than what will end up in the bin as ice. Some water will be drained out every cycle to reduce the amount of hard water scale in the machine. This process is known as a water purge and having an effective purge can increase the time between needed cleaning.

	Minimum	Maximum
Air Temperature	40°F	100°F
Water Temperature	33°F	90°F
Water Pressure	19 psi	80 psi

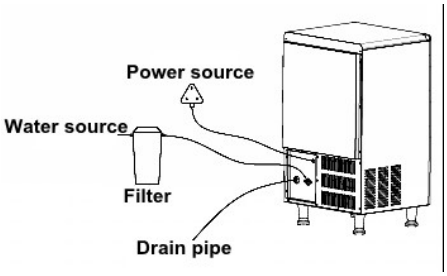

Do not bend the drain pipe

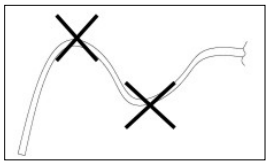

CONTROL PANEL

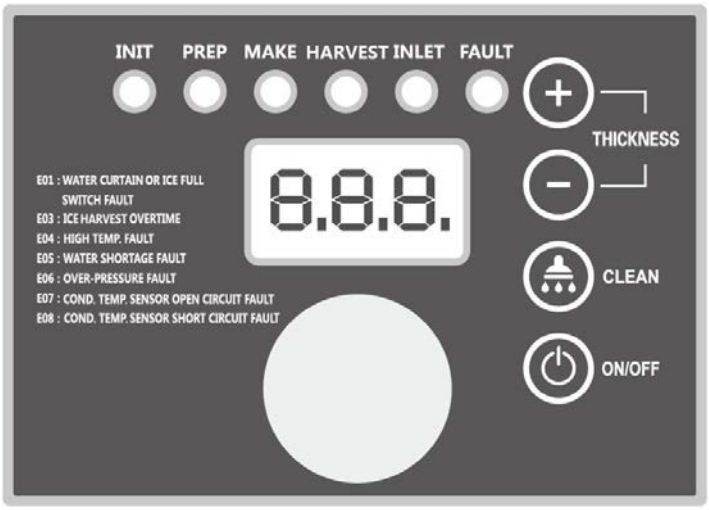

OPERATION

- **STARTING** – After the power and water supply have been properly connected, switch the machine on by pressing the ON/OFF button on the display panel
- **PRE- COOLING** – The inlet valve will automatically open once the machine is turned on. The evaporator will pre-cool for 30 seconds before water pumping will start. The compressor will start, and the water pump will stop running. The inlet valve will remain open until reaching the specified level.
- **ICE-MAKING** – The water pump will begin working after the machine has pre-cooled for 30 seconds. The water will flow continuously through the evaporator and will form ice cubes in the ice tray.
- **ICE FALL** – When the machine has reached its capacity the pump will shut down and the frost valve will open allowing hot air into the evaporator. In approximately 1-2 minutes, the ice from the evaporator will fall into the ice bin. In order to avoid injury, do not put your hands into the ice bin during this process.
- **SHUTDOWN** – If the machine is running and needs to be shutdown, click the ON/OFF button on the control panel
- **FULL ICE BIN** – The machine will automatically stop when the ice bin is full. The machine will automatically restart when the ice bin has been emptied.

THE MACHINE WILL STOP WORKING WHEN THE FOLLOWING OCCURS:

- The ice does not fall after 3 attempts
- The ambient temperature exceeds the maximum temperature allowed (100°F)
- The machine runs out of water

MAINTENANCE

This ice machine requires the following types of maintenance:
- Remove the build up of mineral scale from the ice machine's water and internal sensor system
- Sanitize all parts of the ice machine's water system and storage bin
- Clean or replace the air filter and condenser

It is the user's responsibility to maintain the ice machine and storage bin in a sanitary condition. Without doing this regularly, the machine will become unsanitary. Ice machines also require occasional cleaning of their water systems with specific chemicals used to dissolve the mineral build up that occurs over time.

EXTERIOR CLEANING

To properly clean the exterior of the unit, wipe all surfaces with a damp washcloth to remove dirt and dust. It is recommended to use a mild soap and warm water solution to help remove heavier buildup of grease and dirt. To prevent damage to the exterior never use steel wool or abrasive pads for cleaning. Never use bleach or citrus based cleaners on the outside of the unit.

DESCALING AND SANITIZING

It is important to descale and sanitize the ice machine every six months. This process removes lime, scale and mineral deposits throughout the entire water system and keeps the unit in line with health code requirements. It is recommended to have this cleaning process performed by a authorized professional to ensure its done correctly. You will need descaler and sanitizing solutions to properly perform this cleaning process.

1. Remove the front panel by unscrewing the four screws located in each corner
2. Remove the evaporator cover.
3. Remove all ice from the storage bin and dispenser.
4. On the control panel push the "CLEAN" button to start the cycle.
5. Pour descaler into the reservoir. The unit will circulate the descaler, drain and flush it through the internal water system. This process will take about 20-30 minutes. Once completed, the machine will stop circulating.
6. To clean the internal components, in a pail mix together 1 oz of descaler to 12 ounces of water. The components that need to be sanitized are the water distributor, ice thickness sensor, adjustment screw, water level sensor and evaporator cover. These components need to be removed from the machine and sanitized individually. Once sanitized, return the components to their places inside the machine and run the "CLEAN" cycle again to fully flush away all of the sanitizing solution. Once the initial harvest cycle has run, the reservoir will fill up again. Pour sanitizing solution into the reservoir to begin the next sanitizing cycle. This cycle will take about 20-30 minutes to run. Once completed, the machine will stop circulating.
7. Once unit has completed the "CLEAN" cycle, replace evaporator cover and re-attach the front panel.

ICE STORAGE BIN

1. To clean the ice storage bin, first remove and discard all ice.
2. Mix together a solution of descaler and water following the instructions on the descaler bottle.
3. Wash all interior surfaces of the ice storage bin to remove any mineral scale build up. Flush excess cleaning solution through the bin's drain.
4. Mix a solution of sanitizer and water following the instructions on the bottle.
5. Wash all interior surfaces of the ice storage bin and flush out excess sanitizer solution through the bin's drain.

AIR FILTERS

It is important to clean the air filters regularly and prevent them from getting dirty. If not properly cleaned, the machine will not run efficiently.

1. Pull all of the air filters out.
2. Wash off dust and grease on the filter with warm water.
3. Return filter to its original position. Do not operate unit without the air filters in place.

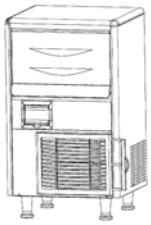

To remove air filter, pull out from side.

EXTERNAL WATER FILTER

The external water filter must be checked regularly to ensure proper filtration and water pressure. Change cartridges every 6 months or if water pressure drops low when the ice machine is filling with water.

TROUBLESHOOTING

Problem	Symptoms	Solutions
Ice machine not starting up	No power supply	Check if unit is plugged in
Machine stops running after 3 minutes	High pressure protection	Lower the ambient temperature
Ice isn't falling into bin	Ice machine is dirty Ambient temperature is low	Clean the machine Raise ambient temperature
Ice is too thin	Water level is low Inlet valve isn't working Low water pressure Blockage in the water line	Check the water level Make sure inlet valve is working Check water pressure Clear pipeline if needed
Slow ice production	Condenser is dirty Ambient temperature is too high Not enough airflow clearance around the unit	Clean the air filter and condenser Lower the ambient temperature Check to make sure there is adequate space for airflow around the unit

ERROR CODES

Code	Comments	Machine action
E01	Water Curtain or Ice Full Switch Fault	Sleeping mode and restart after the sliding board reset
E03	Ice Harvest Overtime	Sleeping mode
E04	High Temp. Fault	Sleeping mode
E05	Water Shortage Fault	Sleeping mode
E06	Over-Pressure Fault	Sleeping mode
E07	Cond. Temp. Sensor Open Circuit Fault	Keeping working
E08	Cond. Temp. Sensor Short Circuit Fault	Keeping working

Exploded Diagram for BIM-120H/BIM-120F

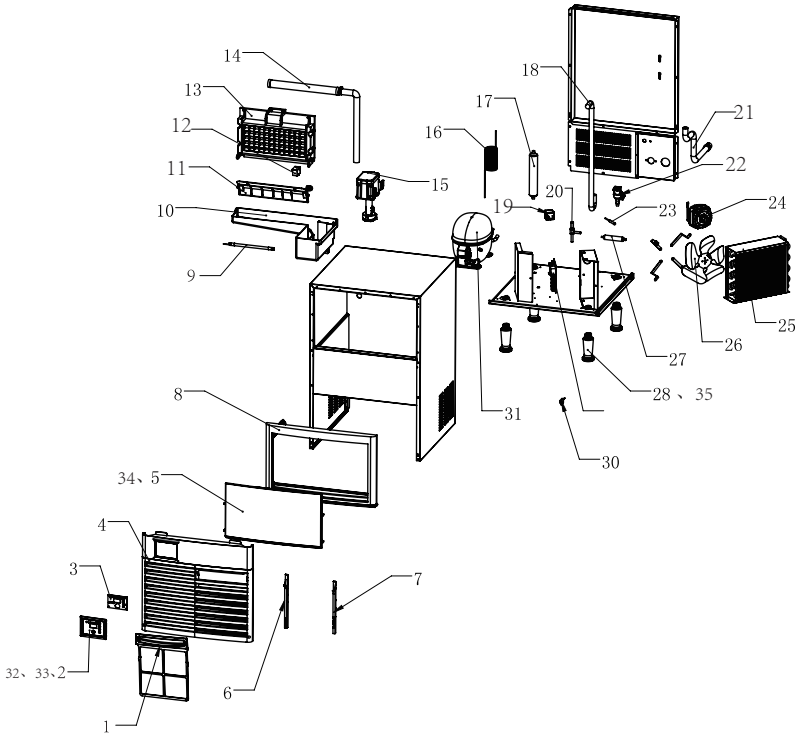

Ref.	Part No.	Name	Specification	Number
1	05.016.016	Ventilation window filter	ABS Injection molding Black grey Front	1
2	05.004.005	Display panel bracket for Vertical type	ABS Injection molding black gray	1
3	03.012.043	Display Panel	No voice, with cleaning button	1
4	05.015.011	Front Ventilation window	ABS Injection molding Black grey Front	1
5	05.013.012	Inner door panel	60/80/100/120	1
6	05.016.017	Filter left card slot	ABS Injection molding Black grey Front	1
7	05.016.018	Filter right card slot	ABS Injection molding Black grey Front	1
8	05.014.007	Door frame assembly - black gray	60/80/100/120	1
9	06.017.003	cold light	9 lamp X3ES-A fog blue L:180 white terminal, red and black line 1200mm	1
10	05.001.004	sink	80 Injection molding overflow M5001	1
11	03.004.001	Skateboard	12 Injection molding homemade M1070	1
12	03.013.008	Ice full sensor - hall type	1400mm-3 line with Chuangli Logo	1
13	03.003.004	evaporator	5 rows * 12 columns	1
14	SL.FB.32480656.	Sprinkler tube assembly	12 columns	1
15	03.009.005	Pump assembly	White 115 v	1
16	02.002.006	capillary	TP2M-OD2.6*ID1.2*T/*2600mm	1
17	02.003.008	gas-liquid separator	₵ 30*220*8.1*8.1	1
18	09.005.003	Silicone hose	white φ14*φ9.5	1
19	04.007.006	Defrosting valve coil	115V 6A 800MM	1
20	04.005.003	Defrost valve body	6A	1
21	17.009.001	Off-board drain	Bellows grey 1.6m M26	1
22	04.003.010	inlet valve	110~120V 4W 50/60HZ blue 1266220 1.2L	1
23	04.010.008	Condensation sensor	Stainless steel probe 1000mm	1
24	03.006.011	fan	EBM 10W 115VAC 50/60HZ	1
25	03.005.008	Condenser	Ventilated 80A	1
26	03.007.001	Fan blades	φ200 34°	1
27	02.005.002	dry filter	φ19*150*3.1*6.5	1
28	17.007.003	Foot body	Ice Bin foot	4
29	03.011.038	PC board	Vertical type machine, switching power supply, temperature control, with cleaning, with voice	1
30	06.016.005	LED lamp reed tube magnetic switch	1800mm	1
31	03.001.096	Compressor DLE6.5CN	115V / 60HZ / R290	1
32	05.004.004	Vertical type machine Display board	ABS black gray	1
33	18.001.039	Control panel labeled -31	4 slots, 4 buttons, English	1
34	05.013.014	Outer door panel	ABS Injection molding Black grey Front	1
35	17.007.004	Foot block	Injection molding φ51 M1015	4

Exploded Diagram for BIM-160H/BIM-160F

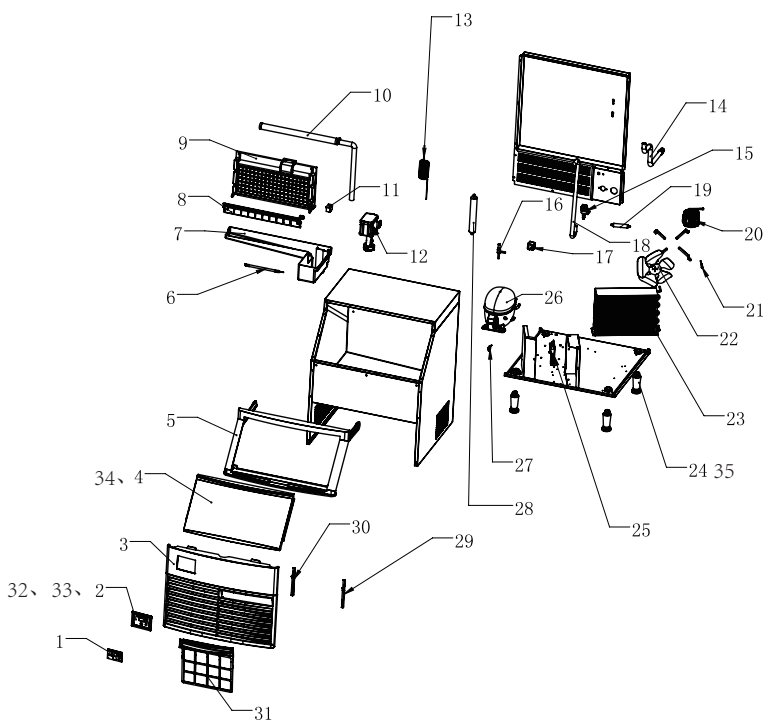

Ref.	Part No.	Name	Specification	Number
1	03.012.043	Display Panel 66414762-01	No voice, with cleaning button	1
2	05.004.005	Display panel bracket for Vertical type	ABS Injection molding Black grey	1
3	05.015.013	Front Ventilation window	ABS Injection molding Black grey Front	1
4	05.013.016	Door panel assembly - black gray	ABS Injection molding Black grey Front	1
5	05.014.009	Door frame assembly - black gray	ABS Injection molding Black grey Front	1
6	06.017.003	cold light	9 lamp X3ES-A fog blue L:180 white terminal, red and black line 1200mm	1
7	05.001.005	sink	160 Injection molding overflow M5002	1
8	03.004.003	Skateboard	12 Injection molding homemade M107	1
9	03.003.006	evaporator	5 rows * 18 columns	1
10	SL.FB.32480654.	Sprinkler tube assembly	18 columns	1
11	03.013.008	Ice full sensor - hall type	1400mm-3 line with Chuangli Logo	1
12	03.009.005	Pump assembly	White 115 v	1
13	02.002.006	capillary	TP2M-OD2.6*ID1.2*T/*2600mm	1
14	17.009.001	Off-board drain	Bellows grey 1.6m M26	1
15	04.003.010	inlet valve	110~120V 4W 50/60HZ blue 1266220 1.2L	1
16	04.005.003	Defrost valve body	6A	1
17	04.007.006	Defrosting valve coil	115V 6A 800MM	1
18	09.005.003	Silicone hose	white φ14*φ9.5	1
19	02.005.002	dry filter	φ19*150*3.1*6.5	1
20	03.006.011	fan	EBM 10W 115VAC 50/60HZ	1
21	04.010.008	Condensation sensor	Stainless steel probe 1000mm	1
22	03.007.001	Fan blades	φ200 34°	1
23	03.005.008	Condenser - 120.	Ventilated 80A	1
24	17.007.003	Foot body	Ice Bin foot	4
25	03.011.038	PC board 401	Vertical type machine, switching power supply, temperature control, with cleaning, with voice	1
26	03.001.096	Compressor DLE6.5CN	115V / 60HZ / R290	1
27	06.016.005	LED lamp reed tube magnetic switch	1800mm	1
28	02.003.008	gas-liquid separator	⊄30*220*8.1*8.1	1
29	05.016.024	Filter right card slot-	ABS Injection molding Black grey Front	1
30	05.016.023	Filter left card slot	ABS Injection molding Black grey Front	1
31	05.016.016	Ventilation window filter	ABS Injection molding Black grey Front	1
32	05.004.004	Vertical type machine Display board	ABS black gray	1
33	18.001.039	Control panel labeled -31	4 slots, 4 buttons, English	1
34	05.013.018	Outer door panel	ABS Injection molding Black grey Front	1
35	17.007.004	Foot block	Injection molding φ51 M1015	4

Exploded Diagram for BIM-210H/BIM-210F

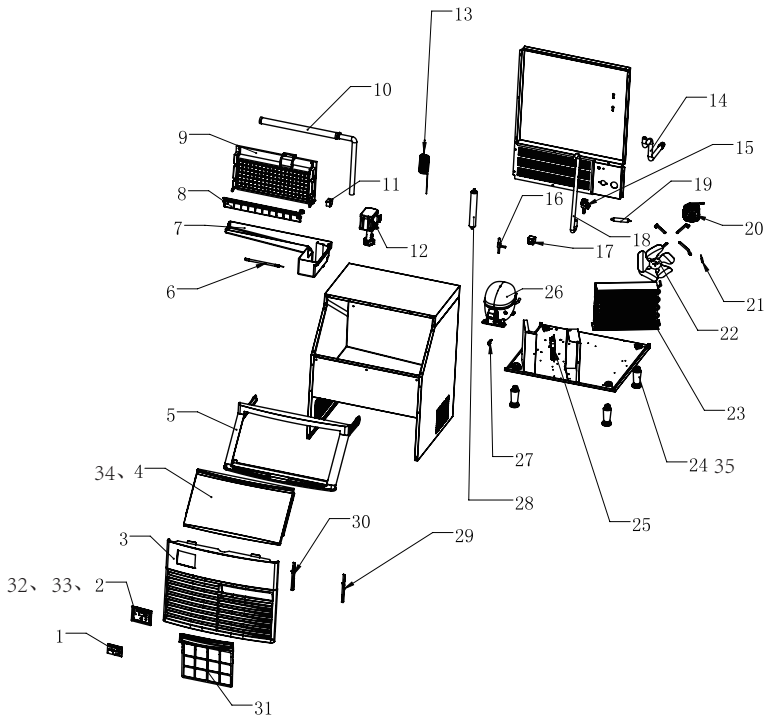

Ref.	Part No.	Name	Specification	Number
1	03.012.043	Display Panel 66414762-01	No voice, with cleaning button	1
2	05.004.005	Display panel bracket for Vertical type	ABS Injection molding Black grey	1
3	05.015.013	Front Ventilation window	ABS Injection molding Black grey Front pumping	1
4	05.013.016	Door panel assembly - black gray	ABS Injection molding Black grey Front pumping	1
5	05.014.009	Door frame assembly - black gray	ABS Injection molding Black grey Front pumping	1
6	06.017.003	cold light	9 lamp X3ES-A fog blue L:180 white terminal, red and black line 1200mm	1
7	05.001.005	sink-160	160 Injection molding overflow M5002	1
8	03.004.003	Skateboard	18 Injection molding homemade M1071	1
9	03.003.008	evaporator-91	Evaporator - 91.	1
10	SL.FB.32480654.	Sprinkler tube assembly	18 columns	1
11	03.013.008	Ice full sensor - hall type	1400mm-3 line with Chuangli Logo	1
12	03.009.005	Pump assembly-60~280	White 115 v	1
13	02.002.002	capillary	TP2M-OD2.8*ID1.27*T/*2600mm	1
14	17.009.001	Off-board drain	Bellows grey 1.6m M26	1
15	04.003.010	inlet valve	110~120V 4W 50/60HZ blue 1266220 1.2L	1
16	04.005.003	Defrost valve body	6A	1
17	04.007.006	Defrosting valve coil	115V 6A 800MM	1
18	09.005.003	Silicone hose	white φ14*φ9.5	1
19	02.005.002	dry filter	φ19*150*3.1*6.5	1
20	03.006.011	fan	EBM 10W 115VAC 50/60HZ	1
21	05.016.016	Condensation sensor	Stainless steel probe 1000mm	1
22	17.007.003	Fan blades	φ200 28°	1
23	04.010.008	Condenser	Ventilated 200A	1
24	03.007.005	Foot body	Ice Bin foot	4
25	03.011.038	PC board 401	Vertical type machine, switching power supply, temperature control, with cleaning, with voice	1
26	03.001.093	Compressor NLE8.0CN	115V / 60HZ / R290	1
27	06.016.005	LED lamp reed tube magnetic switch	1800mm	1
28	02.003.008	gas-liquid separator	¢30*220*8.1*8.1	1
29	05.016.023	Filter right card slot	ABS Injection molding Black grey Front pumping	1
30	17.007.004	Filter left card slot	ABS Injection molding Black grey Front pumping	1
31	05.016.024	Ventilation window filter	ABS Injection molding Black grey Front pumping	1
32	05.004.004	Vertical type machine Display board	ABS black gray	1
33	18.001.039	Control panel labeled -31	4 slots, 4 buttons, English	1
34	05.013.018	Outer door panel	ABS Injection molding Black grey Front pumping	1
35	03.005.009	Foot block	Injection molding φ51 M1015	4

Exploded Diagram for BIM-280H/BIM-280F

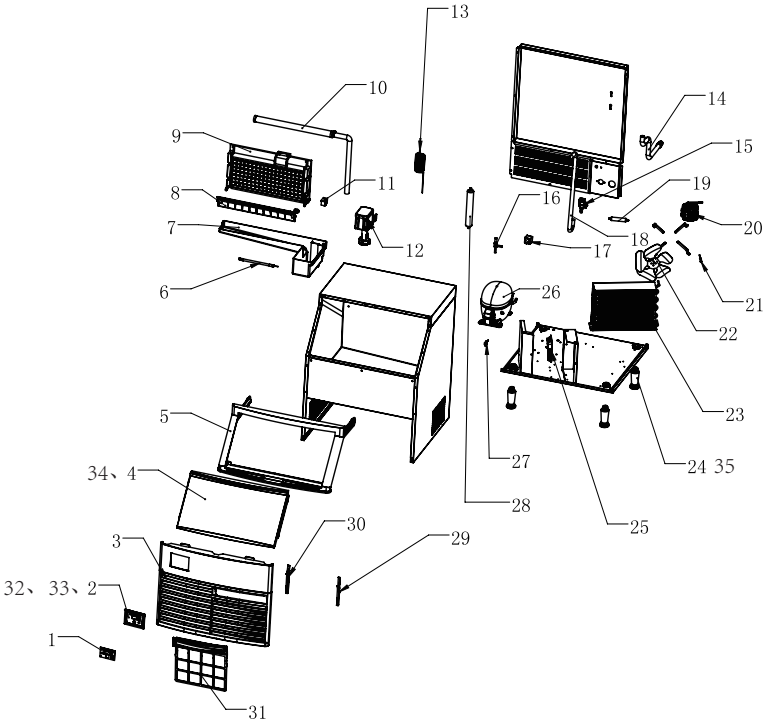

Ref.	Part No.	Name	Specification	Number
1	03.012.043	Display Panel 66414762-01	No voice, with cleaning button	1
2	05.004.005	Display panel bracket for Vertical type	ABS Black grey	1
3	05.015.013	Front Ventilation window	ABS Injection molding Black grey Front	1
4	05.013.016	Door panel assembly - black gray	ABS Injection molding Black grey Front	1
5	05.014.009	Door frame assembly - black gray	ABS Injection molding Black grey Front	1
6	06.017.003	cold light	9 lamp X3ES-A fog blue L:180 white terminal, red and black line 1200mm	1
7	05.001.005	sin	160 Injection molding overflow M5002	1
8	03.004.003	Skateboard	18 Injection molding homemade M1072	1
9	03.003.009	evaporator	7 rows * 18 columns	1
10	SL.FB.32480654.	Sprinkler tube assembly	18 columns	1
11	03.013.008	Ice full sensor - hall type	1400mm-3 line with Chuangli Logo	1
12	03.009.005	Pump assembly	White 115 v	1
13	02.002.002	capillary	TP2M-OD2.8*ID1.27*T/*2300mm	1
14	17.009.001	Off-board drain	Bellows grey 1.6m M26	1
15	04.003.010	inlet valve	110~120V 4W 50/60HZ blue 1266220 1.2L	1
16	04.005.003	Defrost valve body	6A	1
17	04.007.006	Defrosting valve coil	115V 6A 800MM	1
18	09.005.003	Silicone hose	white φ14*φ9.5	1
19	02.005.002	dry filter	φ19*150*3.1*6.5	1
20	03.006.011	fan	EBM 10W 115VAC 50/60HZ	1
21	04.010.008	Condensation sensor	Stainless steel probe 1000mm	1
22	03.007.005	Fan blades	φ200 28°	1
23	03.005.009	Condenser	Ventilated 200A	1
24	17.007.003	Foot body	Ice Bin foot	4
25	03.011.038	PC board 401	Vertical type machine, switching power supply, temperature control, with cleaning, with voice	1
26	03.001.091	Compressor DLE6.5CN	115V / 60HZ / R290	1
27	06.016.005	LED lamp reed tube magnetic switch	1800mm	1
28	02.003.008	gas-liquid separator	₵30*220*8.1*8.1	1
29	05.016.024	Filter right card slot-	ABS Injection molding Black grey Front	1
30	05.016.023	Filter left card slot	ABS Injection molding Black grey Front	1
31	05.016.016	Ventilation window filter	ABS Injection molding Black grey Front	1
32	05.004.004	Vertical type machine Display board	ABS black gray	1
33	18.001.039	Control panel labeled -31	4 slots, 4 buttons, English	1
34	05.013.018	Outer door panel	ABS Injection molding Black grey Front	1
35	17.007.004	Foot block	Injection molding φ51 M1015	4

ICE MACHINE WARRANTY

ONE YEAR WARRANTY - PARTS AND LABOR

BERG warrants to the original purchaser of this unit, the cabinet and all parts thereof, to be free from defects in material or workmanship, under normal use and service, for a period of one (1) year from the date of original installation or 1 year after shipment date, whichever occurs first.

Any parts covered by this warranty that are examined and determined to have been defective within one (1) year of original installation or 1 year after shipment date from manufacturer, whichever occurs first, shall be repaired or replaced as stated below. Shall be deemed to have fully complied with its obligation under the foregoing warranties by electing either one of the following procedures:

1.Furnishing a replacement part, freight collect, in even exchange for the returned part, freight collect.

2.Receiving the defective part, freight collect; repairing it; and returning it, freight collect.

ADDITIONAL FOUR YEAR COMPRESSOR/EVAPORATOR PLATE PART WARRANTY

In addition to the (1) one year warranty stated above, warrants its hermetically and semi-hermetically sealed compressor and evaporator plate to be free from defects in both material and workmanship under normal use and service for a period of four (4) additional years from the date of original installation but not to exceed five (5) years and three (3) months after shipment from manufacturer.

Compressors determined to have been defective within this extended time period will be either repaired or replaced with a compressor or compressor parts of similar design and capacity.

The four (4) year extended compressor warranty applies only to hermetically and semi-hermetically sealed parts of the compressor and does not apply to any other parts or components, including, but not limited to, cabinet, paint finish, temperature control, refrigerant, metering device, driers, motor starting equipment, fan assembly any other electrical component, etc.

134A (404A) AND R290 COMPRESSOR WARRANTY

The four year compressor warranty detailed above will be voided if the following procedure is not carefully adhered to:

1.This system contains R134A (R404A) and R290 refrigerant and polyol ester lubricant. The Polyester lubricant has rapid moisture absorbing qualities. If long exposure to the ambient conditions occur, the lubricant must be removed and replaced with new. Failure to comply with recommended lubricant specification will void the compressor warranty.

2.Dryer replacement is very important and must be changed when a system is opened for servicing. Dryer must be used with XH-9 desiccant.

3.Micron level vacuums must be achieved to insure low moisture levels in the system. 500 microns or lower must be obtained.

WHAT IS NOT COVERED BY THIS WARRANTY

This warranty covers products shipped into the 48 contiguous United States. Warranty coverage on products used outside the 48 contiguous United States, Hawaii, Alaska, Puerto Rico, and Canada, cover parts only.

Obligation under warranty is limited to either repair or replacement of parts, subject to the additional limitations below. This warranty neither assumes nor authorizes any person to assume obligations other than expressly covered by this warranty.

1.WARRANTY IS NOT TRANSFERABLE. This warranty is not assignable and applies in favor of the original purchaser/user to whom delivered. Any such assignment or transfer shall void the warranties herein made and shall void all warranties, express or implied, including any warranty of merchantability or fitness for a particular purpose.

2.NO CONSEQUENTIAL DAMAGES. Not responsible for economic loss: profit loss or special, indirect, or consequential damages, including without limitation, losses or damages arising from food or product spoilage claims whether or not on account of refrigeration failure.

3.ALTERATION, NEGLECT, ABUSE, MISUSE, ACCIDENT, DAMAGE DURING TRANSIT OR INSTALLATION, FIRE, FLOOD, ACTS OF GOD. Not responsible for the repair or replacement of any parts that have been subjected after the date of manufacture to alteration, neglect, abuse, misuse, accident, damage during transit or installation, fire, flood, or an Act of God.

4.NO IMPLIED WARRANTY OF MERCHANTABILITY OR FITNESS FOR A PARTICULAR PURPOSE. There are no other warranties, express, implied or statutory, except the one(1) year warranty and the additional four(4) year compressor warranty as described above. These warranties are exclusive and in lieu of all other warranties, including implied warranty and merchantability or fitness for a particular purpose. There are no warranties which extend beyond the description on the face hereof.

5.TRANSPORTATION COSTS. Will accept parts covered under this warranty freight collect, provided that shipment has received prior approval. Not responsible for any other transportation costs, but will ship freight collect parts either repaired or replaced under these warranties.

6.WARRANTY CLAIMS. All claims should include: model number of the cooler, the serial number of the cabinet, proof of purchase, date of installation, and all pertinent information supporting the existence of the alleged defect. Any action or breach of these warranty provisions must be commenced within one (1) year after that cause of action has occurred. For warranty issues and technical support please call 888-585-9440.

7. This equipment is intended for commercial use only and this warranty is void if equipment is used in other than a commercial application.The manufacturer does not recommend or authorize the use of any product in a non-commercial application, including but not limited to residential use. The use or installation of any product in non-commercial applications renders all warranties, expressed or implied, including the warranties of merchantability and fitness for a particular purpose, null and void, including any responsibility for damage, costs and legal actions resulting from the use or installation of products in any non-commercial setting.

WARRANTY REGISTRATION CARD

MAIL CARD IMMEDIATELY

This card must be mailed immediately after installation date for warranty to be in effect.

BERG ICE MACHINES, 5130 Executive Boulevard, Fort Wayne, IN 46808
Attn: Warranty Registration

_____ (Name of Business)

_____ (Dealer Purchased From)

_____
(Address) (City) (State) (Zip Code)

_____ (Model Number)

_____ (Serial Number)

This is to inform that I, _____
(Please print name of individual who owns business)

have had the above installed in my place of business _____
(Date of Purchase)

_____ (Contact Phone Number)

_____ (Contact E-mail)

_____ (Signature of Individual Who Owns Business)

The above warranties are in effect from this installation date, or 90 days, whichever comes first.