Item # _____ C.S.I. Section 11420

O V E N S

VC44G SERIES
DOUBLE DECK GAS CONVECTION OVENS

Model VC44GD
shown with optional casters

☐ **VC44GD** Solid state temperature controls adjust from 150° to 500°F. 60 minute timer with audible alarm.

☐ **VC44GC** Computer controls with digital time and temperature readouts. 99-hour timer with audible alarm. Roast and Hold cycle. One hundred programmable menu selections. Shelf I.D. programming.

Double deck ovens are supplied as separate units with a stacking kit.

STANDARD FEATURES

- Stainless steel front, sides, top and legs.
- Independently operated stainless steel doors with double pane windows.
- 50,000 BTU/hr. burner per section, 100,000 BTU/hr. total.
- Electronic spark igniters.
- ½ H.P. two speed oven blower-motor. 120/60/1 with 6' cord and plug. 7.7 amps per section. 15.4 amps total draw.
- Oven cool switch for rapid cool down.
- Porcelain enamel on steel oven interior.
- Five nickel plated oven racks with eleven rack positions per section.
- ¾" rear gas connection with combination gas pressure regulator and safety solenoid system.
- One year limited parts and labor warranty.

OPTIONS

☐ Kosher friendly control package.

☐ Complete prison package.

  ☐ Security screws only.

☐ 208V or 240V, 60 Hz, 1 ph, two speed, ½ H.P. blower motor. 208V, 4.2 amps; 240V, 3.6 amps.

☐ Casters.

☐ Simultaneous chain driven doors.

☐ Control panel mounted on left side of oven.

☐ Stainless steel rear enclosure.

☐ Second year extended limited parts and labor warranty.

ACCESSORIES

☐ Extra oven rack(s).

☐ Rack hanger(s).

☐ Stainless steel drip pan.

☐ Flexible gas hose with quick disconnect and restraining device. Consult price book for available sizes.

☐ Down draft flue diverter for direct vent connection.

SPECIFICATIONS

Double section gas convection oven, Vulcan-Hart Model No. (VC44GD) (VC44GC). Stainless steel front, sides, top and legs. Independently operated stainless steel doors with double pane windows. Non-sag insulation applied to the top, rear, sides, bottom and doors. Porcelain enamel on steel oven interiors measures 29"w x 22⅛"d x 20"h. Two interior oven lights per section. Five nickel plated oven racks per section measure 28¼" x 20½". Eleven position nickel plated rack guides with positive rack stops. One 50,000 BTU/hr. burner per section. 100,000 total BTU/hr. Electronic spark igniters. Furnished with a two speed ½ H.P. oven blower-motor per section. Oven cool switch for rapid cool down. 120 volt, 60 Hz, 1 ph power supply required. 6' cord and plug. 7.7 amps total draw per section.

Exterior Dimensions:

40¼"w x 41⅛"d (includes motor & door handles) 37¾"d (includes motor only) x 70"h on 8" legs.

CSA design certified. NSF listed.

SPECIFY TYPE OF GAS WHEN ORDERING.
SPECIFY ALTITUDE WHEN ABOVE 2,000 FT.

a division of ITW Food Equipment Group LLC

P.O. Box 696 ■ Louisville, KY 40201 ■ Toll-free: 1-800-814-2028 ■ Local: 502-778-2791 ■ Quote & Order Fax: 1-800-444-0602

VC44G SERIES
DOUBLE DECK GAS CONVECTION OVENS

INSTALLATION INSTRUCTIONS

1. A combination gas pressure regulator and safety solenoid system is included in this unit. Natural gas is 5.0" W.C., Propane gas is 10.0" W.C.
2. An adequate ventilation system is required for commercial cooking equipment. Information may be obtained by writing to the National Fire Protection Association, Batterymarch Park, Quincy, MA 02289. When writing, refer to NFPA No. 96.
3. These units are manufactured for installation in accordance with ANSZ223.1 (latest edition), National Fuel Gas Code. Copies may be obtained from American Gas Association Inc., Accredited Standards Committee Z223, 400 N. Capitol St. NW, Washington, DC 20001 or the Secretary Standards Council, NFPA, 1 Batterymarch Park, Quincy, MA 02169-7471.
4. Clearances:

	Combustible	Non-combustible
Rear	0"	0"
Right Side	2"	0"
Left Side	1"	0"

5. This appliance is manufactured for commercial installation only and is not intended for home use.

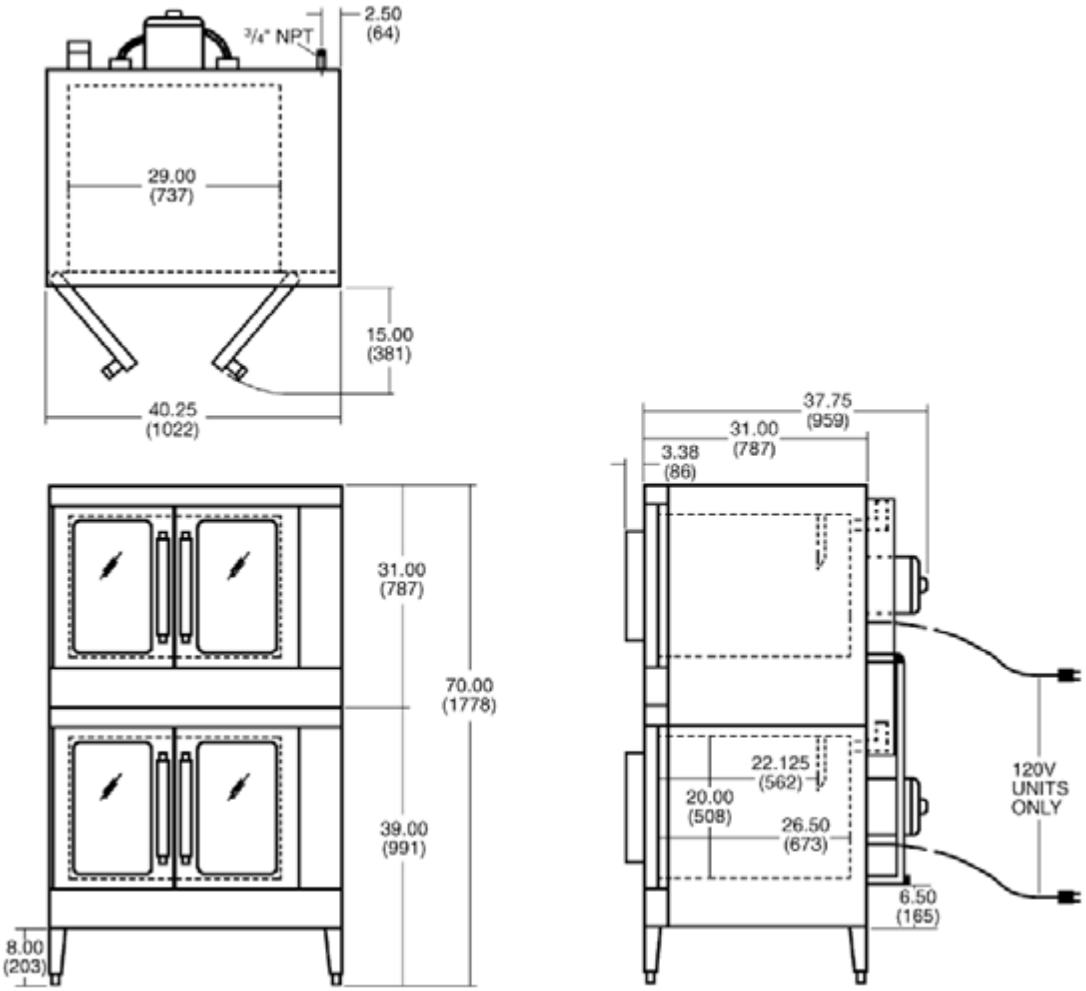

MODEL NO.	WIDTH	DEPTH (INCLUDES HANDLES)	HEIGHT	BTU/HR. PER OVEN	TOTAL BTU/HR.	ELECTRICAL	WEIGHT			
							WITH SKIDS & PACKAGING		WITHOUT SKIDS & PACKAGING	
							LBS.	KG	LBS.	KG
VC44G	40¼"	41⅛"	70"	50,000	100,000	120/60/1	928	422	820	372

a division of ITW Food Equipment Group LLC

P.O. Box 696 ▪ Louisville, KY 40201 ▪ Toll-free: 1-800-814-2028 ▪ Local: 502-778-2791 ▪ Quote & Order Fax: 1-800-444-0602

NOTE: In line with its policy to continually improve its products, Vulcan reserves the right to change materials and specifications without notice.

Printed On Recycled Paper