Item # _____ C.S.I. Section 11420

HEAVY DUTY COOKING

HEAVY DUTY GAS RANGE
DUAL FRENCH TOP / 36" WIDE GAS RANGE

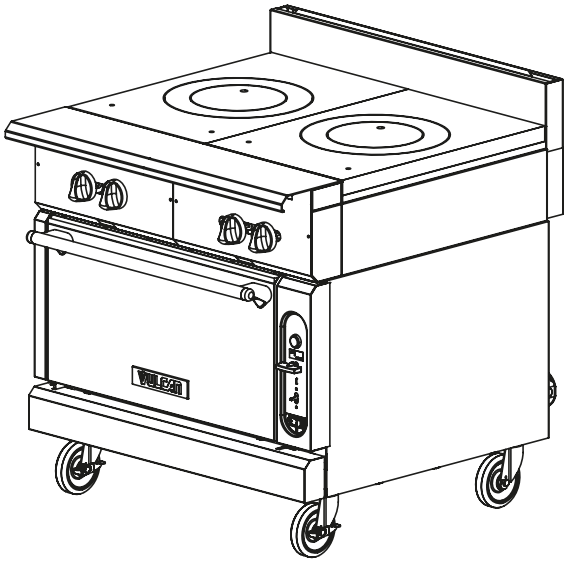

Model V2FT36C
(shown on a standard oven base)

☐ **V2FT36** Dual French Top / Modular
☐ **V2FT36B** Dual French Top / Cabinet Base
☐ **V2FT36S** Dual French Top / Standard Oven
☐ **V2FT36C** Dual French Top / Convection Oven

STANDARD FEATURES

- Stainless steel front, front top ledge, burner box, sides, base, and stub back
- 1¼" diameter front gas manifold with 1¼" rear gas connection (capped)
- Two 18" wide French Tops
- 25,000 BTU/hr. burners (2 each ring burner)
- 50,000 BTU/hr. standard oven burner
- 32,000 BTU/hr. convection oven burner
- Porcelain oven cavity
- Individual pilots and controls for each burner
- Polished cast iron French Top
- 4" stainless steel stub riser
- 6" adjustable stainless steel legs for “S”, “C”, & “B” models (no legs for modular model)
- Stainless steel cabinet base doors
- One year limited parts and labor warranty

OPTIONAL FEATURES (Factory Installed)

☐ Cap and cover front manifold
☐ Stainless steel oven cavity
☐ 650°F oven thermostat and steel hearth. (“S” models)
☐ Fan cooling package (“C” models)
☐ 4" adjustable flanged feet for modular models
☐ Less legs for dolly mounting of cabinet base models
☐ 3" high toe base for curb mounting

ACCESSORIES (Packaged & Sold Separately)

☐ ¾", 1", or 1¼" gas pressure regulator (specify gas type – pack loose)
☐ Set of 4 casters, 6" high (two locking)
☐ 6" adjustable flanged feet for “S”, “C”, & “B” models
☐ Extra removable shelves for use with Universal rack guides (cabinet base)
☐ Banking strip
☐ Common condiment type, telescoping plate rails (starting at 24" length)
☐ Straight, diamondcast, rod, and waffle/fish grates
☐ 10", 22", or 34" high back risers (no shelf)
☐ 22" single deck solid or flo-thru high shelf risers
☐ 34" double deck solid or flo-thru high shelf risers
☐ Dolly frames
☐ Flexible gas hose with quick disconnect & restraining device

SPECIFICATIONS

36" wide heavy duty gas range, Vulcan Model No. V2FT36 (modular), V2FT36B (cabinet base), V2FT36S (standard oven base) or V2FT36C (convection oven base). Modular construction for ease of installation. Stainless steel front, plate ledge, front top ledge with pull-out condiment rails, sides, base, stub back and 6" adjustable legs on all “B”, “S”, & “C” models. Stainless steel extra deep crumb tray. Two 25,000 BTU/hr. cast 2 ring burners. Individual pilots and controls for each burner. Heavy polished cast iron French plate. Individual pilots and controls for each burner. **Standard Oven:** 50,000 BTU/hr. with porcelain oven bottom, sides, and interior door panel. **Convection Oven:** 32,000 BTU/hr. with porcelain oven bottom, sides, and interior door panel (115v-1 phase blower motor, 4 amps, 6' cord & plug). Ovens measure 27"w x 27"d x 13"h. Standard oven thermostats adjust from 150° – 550°F. Convection oven adjusts from 175° – 550°F; and the optional finishing oven for standard ovens, 300° – 650°F. Standard oven supplied with one rack, convection oven with two. Both ovens allow for three rack positions. Oven door is heavy duty with counter weight door hinges. 1¼" diameter front manifold and 1¼" rear gas connection, capped. Total input 50,000 BTU/hr.

Exterior Dimensions:

36¾"d x 36"w x 36"h on 6" adjustable legs

a division of ITW Food Equipment Group LLC

P.O. Box 696 ■ Louisville, KY 40201 ■ Toll-free: 1-800-814-2028 ■ Local: 502-778-2791 ■ Quote & Order Fax: 1-800-444-0602

HEAVY DUTY GAS RANGE
DUAL FRENCH TOP / 36" WIDE GAS RANGE

INSTALLATION INSTRUCTIONS

1. A properly sized gas pressure regulator suitable for battery or single unit application must be furnished and installed. Natural gas 6.0" W.C., propane gas 10.0" W.C.
2. An adequate ventilation system is required for commercial cooking equipment. Information may be obtained by writing to the National Fire Protection Association, 1 Batterymarch Park, Quincy, MA 02269, www.NFPA.org. When writing, refer to NFPA No. 96.
3. These units are manufactured for installation in accordance with ANSZ223.1A (latest edition), National Fuel Gas Code. Copies may be obtained from The American Gas Association, 400 N Capitol St. NW, Washington, DC 20001, www.AGA.org.
4. **Clearances**

	Rear	Sides
Combustible	10"	10"
Non-combustible	0"	0"

5. For proper combustion, install equipment on adjustable legs or casters. On curb or platform, allow 3½" front overhang. Toe base with leveling bolts are required for curb installation. Specify when ordering.
6. Cannot be batteried with GH series equipment.
7. This appliance is manufactured for commercial installation only and is not intended for home use.

NOTE: In line with its policy to continually improve its product, Vulcan reserves the right to change materials and specifications without notice.

Specify type of gas when ordering.
Specify altitude when above 2,000 feet.

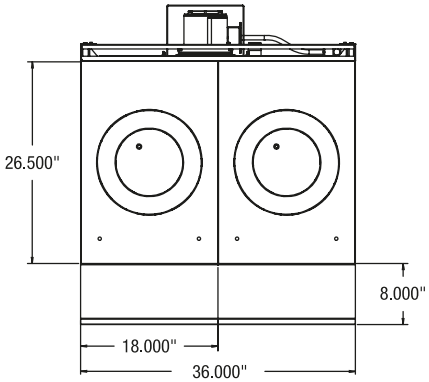

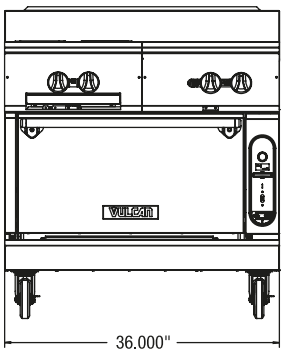

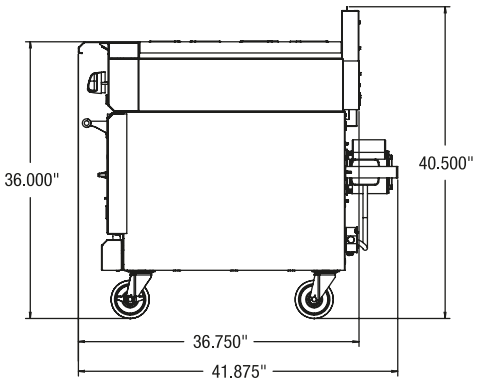

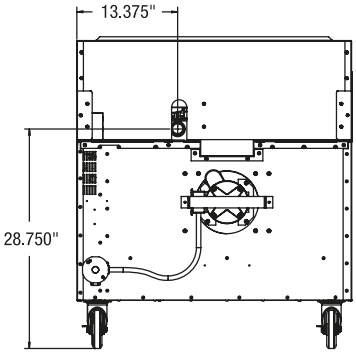

TOP CONFIGURATION	MODEL NUMBER	DESCRIPTION	TOTAL INPUT BTU / HR	SHIPPING WEIGHT LBS / KG
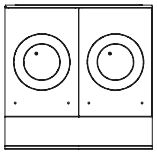	**V2FT36**	Dual French Top / Modular	50,000	404 / 183
	V2FT36B	Dual French Top / Cabinet Base	50,000	504 / 229
	V2FT36S	Dual French Top / Standard Oven Base	100,000	685 / 311
	V2FT36C	Dual French Top / Convection Oven Base	82,000	763 / 346

This appliance is manufactured for commercial use only and is not intended for home use.

a division of ITW Food Equipment Group LLC

P.O. Box 696 ■ Louisville, KY 40201 ■ Toll-free: 1-800-814-2028 ■ Local: 502-778-2791 ■ Quote & Order Fax: 1-800-444-0602

NOTE: In line with its policy to continually improve its products, Vulcan reserves the right to change materials and specifications without notice.

Printed On Recycled Paper