BEVERAGE-AIR

Project: _____ Item: _____ Location: _____ Approved:	AIA# SIS#

WORKTOP FREEZER

MODEL: WTF48AHC-FIP

WTF48AHC Solid Door With Foamed-In Place Backsplash Hydrocarbon Series

3 Year Parts/Labor Warranty
Additional 4 Year Compressor Warranty

CABINET CONSTRUCTION

- Stainless steel front, sides, door and grille (galvanized back & bottom)
- Interior liner is made of corrosion resistant aluminum
- Stainless steel top for added durability
- Full electronic control
- Interior thermometer is standard
- Foamed-in place backsplash
- Self-closing doors with 120˚ stay-open feature, on cartridge style hinges
- Door opening includes low wattage, anti-condensate heaters
- Magnetic gasket attached to each door for positive seal
- 6” Casters, two (2) with brakes standard
- Two (2) epoxy-coated steel wire shelves per door section
- Field-reversible doors (hinge kit not included)

OPTIONS & ACCESSORIES

- Stainless steel back
- Stainless steel interior
- 16 Gauge stainless steel top
- Additional shelves
- Shelf clips
- Glass door option
- Right or left hinged door
- Locks (solid doors only)
- Bun rack
- Wire shelf divider
- 3” Casters
- 6” legs (stainless steel, black or seismic/flange)
- Low profile casters
- Roller kit
- Remote option* (see note on back on page)

REFRIGERATION SYSTEM

- Uses environmentally friendly, energy efficient R290 refrigerant, and meets all regulatory requirements for CARB, SNAP, DOE & more
- Adaptive defrost
- Epoxy coated evaporator coil
- Freezers capable of maintaining product temperature of -10ºF

WTF48AHC WORKTOP FREEZER

Please verify qualifying units by visiting:
www.energystar.gov/cfs

3779 Champion Blvd., Winston-Salem, NC 27105
1-888-845-9800 Fax: 1-336-245-6453
Beverage-Air.com Sales@bevair.com

BEVERAGE-AIR

Worktop Freezer
Models: WTF48AHC-FIP

MODEL	WTF48AHC-FIP
EXTERNAL DIMENSIONAL DATA	
Width Overall	48”
Depth Overall with Handle & Bumper	32”
Height Overall with 6” Casters	39 ⅝”
Number of Doors	2
Depth with Door Open 90°	52 ¼”
Door Opening	19 ⅝” x 21 ⅝”
INTERNAL DIMENSIONAL DATA	
NET Capacity (cubic ft.)	11.04
Internal Width Overall (in)	44”
Internal Depth Overall (in)	15 ⅜”
Internal Height Overall (in)	23”
Number of Shelves	4
ELECTRICAL DATA	
Full Load Amperes	7.0
REFRIGERATION DATA	
Horsepower	1/2
Capacity (BTU/Hr)	1861
SHIPPING DATA	
Gross Weight - Crated	214 lbs
Height - Crated	35”
Width - Crated	51”
Depth - Crated	32”

*NOTE: Remote units are field wired and come with 6” legs.
Refrigerant must be specified at time of order.

Model Views

Required Clearance: 3 3/16” bottom & 2” rear

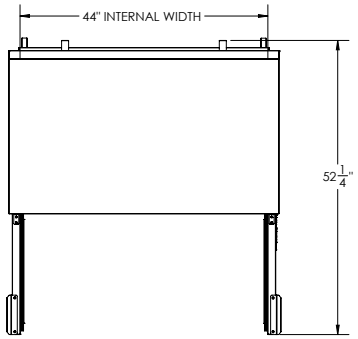

PLAN VIEW

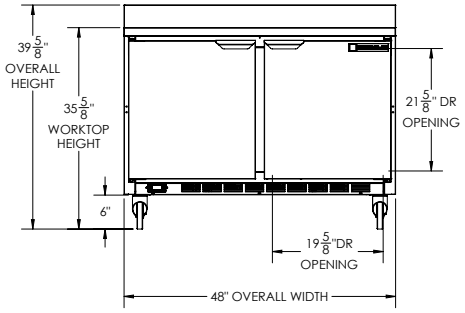

ELEVATION VIEW

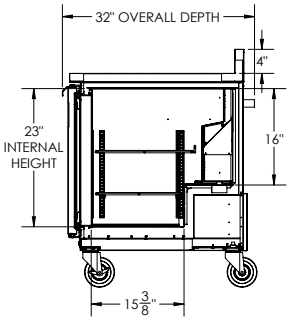

SIDE VIEW

*ELECTRICAL CONNECTION

115/60/1
NEMA 5-15P

Unit pre-wired at factory and include 8’ long cord and plug set.

3779 Champion Blvd., Winston-Salem, NC 27105 1-888-845-9800 Fax: 1-336-245-6453 Beverage-Air.com Sales@bevair.com

an Ali Group Company

GROUP

The Spirit of Excellence