BEVERAGE-AIR

Project: _____	AIA#
Item: _____	
Location: _____	SIS#
Approved: _____	

WTFD FREEZER WITH DRAWERS

MODELS:
WTFD60AHC-4

WTFD60AHC Four Drawer Freezer with Removable Backsplash
Hydrocarbon Series

WTFD60AHC-4 Freezer with Drawers: Worktop Series

WTFD60AHC-4

OPTIONS & ACCESSORIES

- ☐ Stainless steel back and grille
- ☐ Stainless steel interior
- ☐ Cutting board
- ☐ 3” Casters or 6” legs
- ☐ Low profile casters
- ☐ Remote option

3 Year Parts/Labor Warranty
Additional 2 Year Compressor Warranty

CABINET CONSTRUCTION

- Stainless steel front, sides and drawers *(galvanized back & bottom)*
- Interior liner is made of corrosion resistant aluminum
- Stainless steel worktop for added durability
- Full electronic control
- Interior thermometer is standard
- 4” Removable backsplash for flexibility and ease of cleaning
- Painted aluminum drawer handles
- Snap-in drawer gaskets
- Upper and lower pull-out drawers accommodate 6” deep pans
- Stainless steel drawer frames supported on telescoping drawer slides
- Drawer slides include locking mechanism that prevents drawer from being inadvertently pulled off cabinet
- 6” Casters, two (2) with brakes standard
- Freezer model temperature is held at 0ºF and below

REFRIGERAT ION SYSTEM

- Refrigeration system uses R290 refrigerant to comply with all environmental concerns
- Automatic, electric defrost
- Epoxy coated evaporator coil

3779 Champion Blvd., Winston-Salem, NC 27105
1-888-845-9800 Fax: 1-336-245-6453
Beverage-Air.com sales@bevair.com

BEVERAGE-AIR

Worktop Freezer – With Drawers

Models: WTFD60AHC-4 Removable Backsplash

MODEL	WTFD60AHC-4
EXTERNAL DIMENSIONAL DATA	
Width Overall	60”
Depth Overall with Handle & Bumper	32”
Height Overall with 6” Casters	39 5/8”
Number of Drawers	4
Depth with Drawer Extended	47 1/2”
Drawer Openings (in)	(4) 22 5/8” x 9 3/8”
INTERNAL DIMENSIONAL DATA	
NET Capacity (cubic ft.)	14.39
Internal Width Overall (in)	56”
Internal Depth Overall (in)	23 1/2”
Internal Depth Useable (in)	15 3/8”
Internal Height Overall (in)	23”
ELECTRICAL DATA	
Full Load Amperes 115/60/1	7.0
REFRIGERATION DATA	
Horsepower	1/2
Capacity (BTU/Hr)*	1868
WEIGHT DATA	
Gross Weight (Crated lbs)	392 lbs
Height - Crated	35”
Width - Crated	62”
Depth - Crated	33”

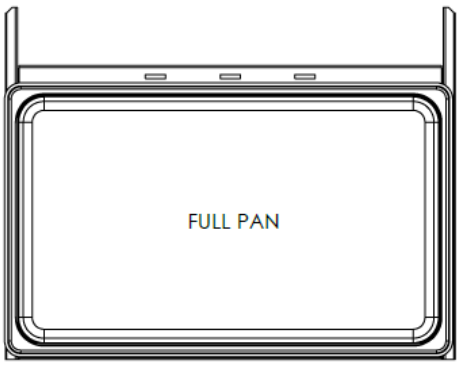

Model Views

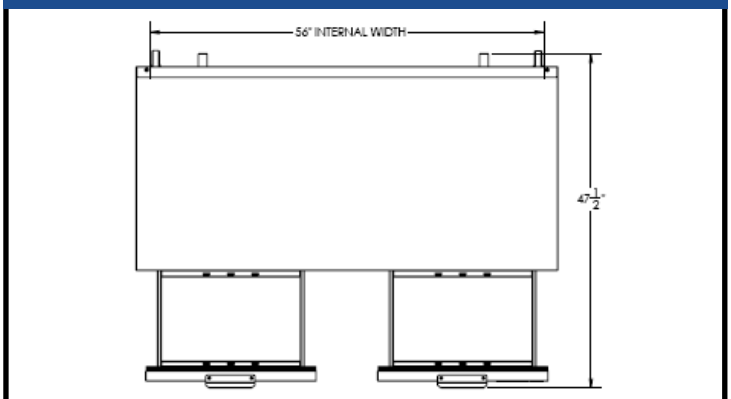

Plan View

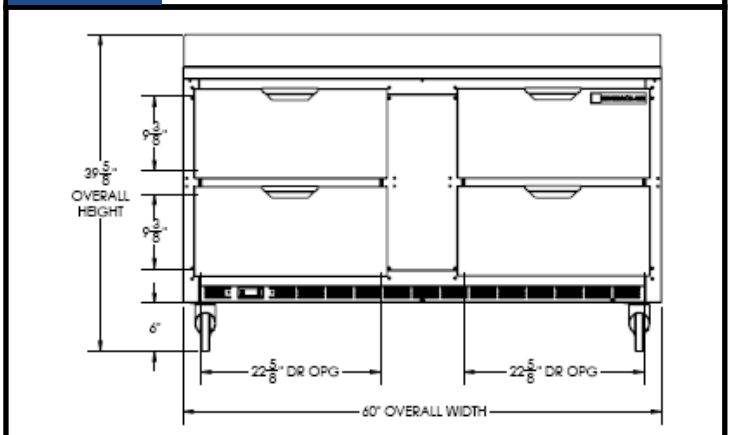

Elevation View

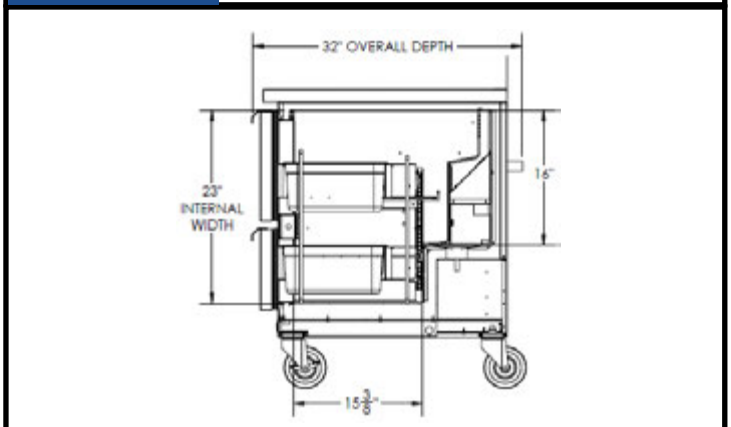

Side View

ELECTRICAL CONNECTION

115/60/1
NEMA-5-15P

Units pre-wired at factory and include 8’ long cord and plug set.

an Ali Group Company

The Spirit of Excellence

3779 Champion Blvd., Winston-Salem, NC 27105
1-888-845-9800 Fax: 1-336-245-6453
Beverage-Air.com sales@bevair.com