Three Compartment Sink with 18" Drain board on Left

ITEM # **PA1631**

Materials

- Sink and Bowl:16 Gauge 304 series stainless steel
- Top: Drain board and backsplash are16 Gauge 304 series stainless steel
- Legs:1-5/8" diameter stainless steel tubing with stainless steel leg sockets and stainless steel adjustable feet

Specifications
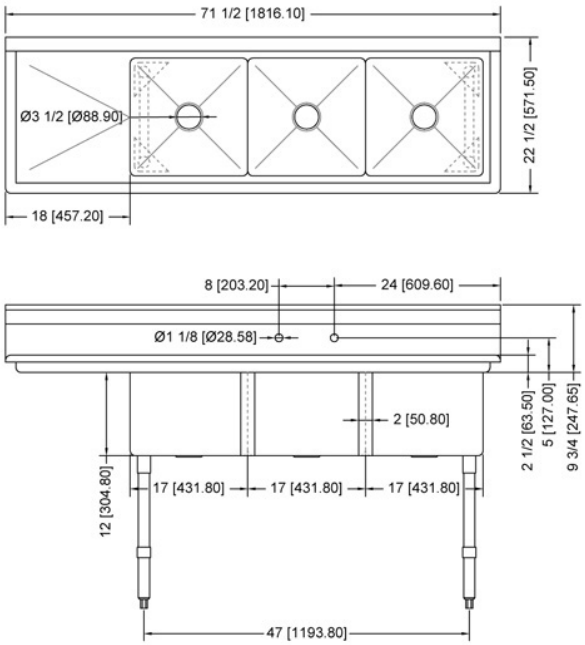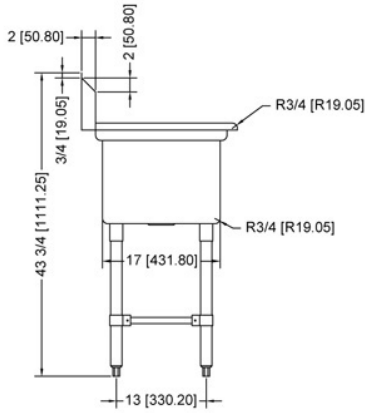
- Three compartment sink with one 18" drain board on left
- 71-1/2"W x 22-1/2"D x 43-3/4"H
- 10-3/8" backsplash
- Stainless steel "H" shape leg bracing
- 1-1/8" faucet holes 8" on center
- Includes three 3-1/2" basket strainers
- Welded construction for consistent metal gauge thickness throughout
- 17" x 17" x 12" deep bowls with 3/4"coved radius tub corners
- Raised 1-1/2” diameter rolled edge
- NSF approved