"WE MAKE THE KITCHEN BETTER!"
Toll Free: 855-855-0399 Email: info@atosausa.com
www.atosa.com | www.atosausa.com
California, Colorado, Florida, Georgia, Illinois,
Massachusetts, New Jersey, Ohio, Texas, Washington

MODELS:

SBB48GRAUS2 / SBB59GRAUS2 / SBB69GRAUS2

Shallow Depth Back Bar Coolers

Standard Features

- Black Exterior & Stainless Steel Interior
- Electronic temperature controller
- Maintains temperatures between 33°F– 40°F
- Heavy duty compressor with environmentally friendly R290 refrigerant
- Slide out compressor assembly for easy maintenance
- Recessed door handle(s)
- Interior light(s)
- Magnetic door gasket(s) standard for positive door seal
- Door lock(s) standard
- Pre-installed epoxy coated shelves
- Pre-installed casters

Optional Accessories

- Extra shelves – includes 4 shelf clips per shelf
  SBB48GRAUS2 - Top Left Shelf part#: W040237801
  (Top Right Shelf, Bottom Shelves) W040237701
- SBB59GRAUS2 - Top Left Shelf part#: W040235801
  (Top Right Shelf, Bottom Shelves) W040235701
- SBB69GRAUS2 - Top Left Shelf part#: W040238101
  (Top Right Shelf, Bottom Shelves) W040238001

SBB48GRAUS2

SBB59GRAUS2

SBB69GRAUS2

For the best results of food preservation we recommend setting your refrigerator between 33 °F - 40 °F

1. Don't forget to leave the unit some room to breathe!
2. Please clean the condenser frequently to give the unit more fresh air.

2 YEAR PARTS AND LABOR WARRANTY (US ONLY)
5 YEAR COMPRESSOR PART WARRANTY (US ONLY)

"WE MAKE THE KITCHEN BETTER!"
Toll Free: 855-855-0399 Email: info@atosausa.com
www.atosa.com | www.atosausa.com
California, Colorado, Florida, Georgia, Illinois,
Massachusetts, New Jersey, Ohio, Texas, Washington

SPECIFICATIONS

Models	Door	Capacity (Cu.Ft.)	Shelves	Casters (inch)	Amps (A)	Voltage (V/Hz/Ph)	HP	Refrigerant	Exterior Dimensions (inch)	Net Weight (lbs)	Gross Weight (lbs)
SBB48GRAUS2	2	11.5	4	2	2.3	115/60/1	1/7	R290	$48\times24^{1/2}\times40^{1/8}$	183	227
SBB59GRAUS2	2	15	4	2	2.3	115/60/1	1/7	R290	$57^{3/4}\times24^{1/2}\times40^{1/8}$	203	247
SBB69GRAUS2	2	18.6	4	2	2.3	115/60/1	1/7	R290	$68\times24^{1/2}\times40^{1/8}$	225	276

PLAN VIEW

SBB48GRAUS2

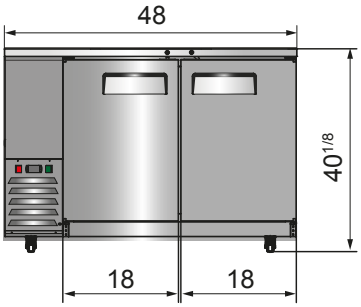

SBB59GRAUS2

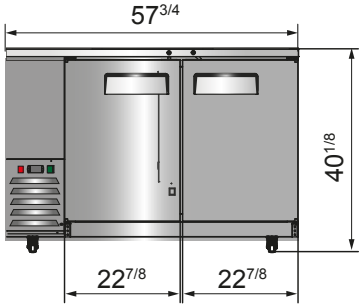

SBB69GRAUS2

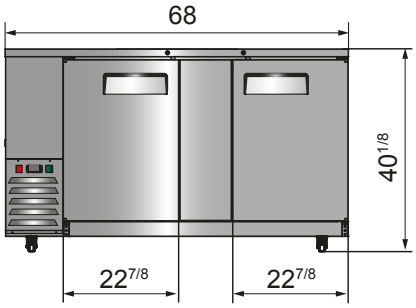

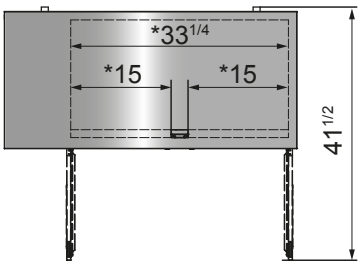

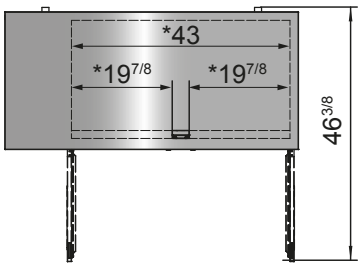

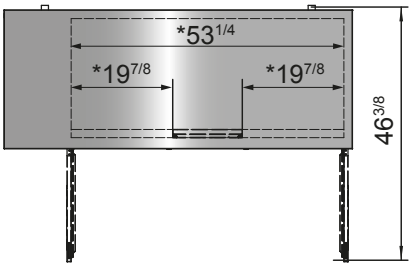

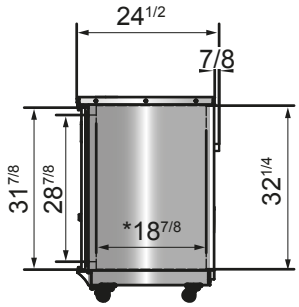

*Interior Dimensions

Epoxy shelves

Door lock

Temperature control

Recessed handles

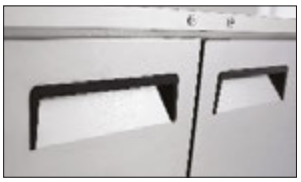

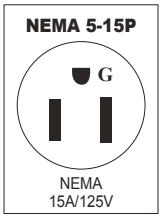

Atosa is continuously improving products. Specifications are subject to change without notice.