"WE MAKE THE KITCHEN BETTER!"
Toll Free: 855-855-0399 Email: info@atosausa.com
www.atosa.com | www.atosausa.com
California, Colorado, Florida, Georgia, Illinois, Massachusetts, New Jersey, Ohio, Texas, Washington

Refrigerated Chef Bases

MODELS:

MGF8448GR / MGF8450GR / MGF8451GR
MGF8452GR / MGF8453GR / MGF8454GR

Standard Features

- Stainless steel exterior and interior
- Stainless steel pans included
- Electronic temperature controller
- Maintains temperatures between 34°F – 40°F
- Heavy duty compressor with environmentally friendly R290 refrigerant
- Heavy duty stainless steel drawer slides and rollers
- Magnetic drawer gaskets
- Recessed door handles
- Pre-installed casters
- One-piece heavy duty reinforced stainless steel top to support counter top equipment
- Gravity fed self closing drawers
- Corner Guards included
- Pull out handles included

MGF8448GR

MGF8450GR

MGF8451GR

MGF8452GR

MGF8453GR

MGF8454GR

For the best results of food preservation we recommend setting your refrigerator between 33 °F to 38 °F

1. Don't forget to leave the unit some room to breathe!
2. Please clean the condenser frequently to give the unit more fresh air.

2 YEAR PARTS AND LABOR WARRANTY (US ONLY)
5 YEAR COMPRESSOR PART WARRANTY (US ONLY)

"WE MAKE THE KITCHEN BETTER!"
Toll Free: 855-855-0399 Email: info@atosausa.com
www.atosa.com | www.atosausa.com
California, Colorado, Florida, Georgia, Illinois,
Massachusetts, New Jersey, Ohio, Texas, Washington

SPECIFICATIONS

Models	Drawers	Capacity (Cu.Ft.)	Pans Per Unit	Casters (inch)	Amps (A)	Voltage (V/Hz/Ph)	HP	Refrigerant	Exterior Dimensions (inch)	Net Weight (lbs)	Gross Weight (lbs)
MGF8448GR	2	4.7	2*12x20 & 6*1/6	5	2.3	115/60/1	1/7	R290	$35^{5/8}\times33\times26^{3/5}$	170	218
MGF8450GR	2	7.7	4*12x20 & 6*1/6	5	2.3	115/60/1	1/7	R290	$48^{2/5}\times33\times26^{3/5}$	220	258
MGF8451GR	2	8.4	6*12x20	5	2.3	115/60/1	1/7	R290	$52\times33\times26^{3/5}$	229	273
MGF8452GR	2	8.4	6*12x20	5	2.3	115/60/1	1/7	R290	$60^{1/2}\times33\times26^{3/5}$	234	282
MGF8453GR	4	12.1	8*12x20	5	2.3	115/60/1	1/7	R290	$72^{1/2}\times33\times26^{3/5}$	300	364
MGF8454GR	4	12.1	8*12x20	5	2.3	115/60/1	1/7	R290	$76\times33\times26^{3/5}$	309	368

PLAN VIEW

MGF8448GR

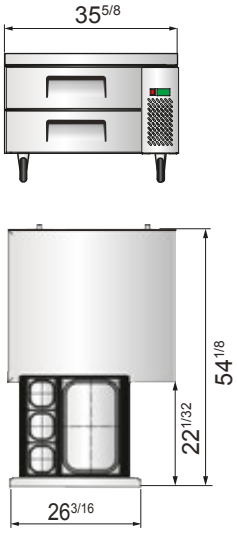

MGF8450GR

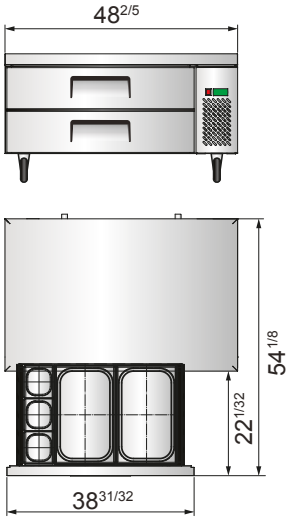

MGF8451GR

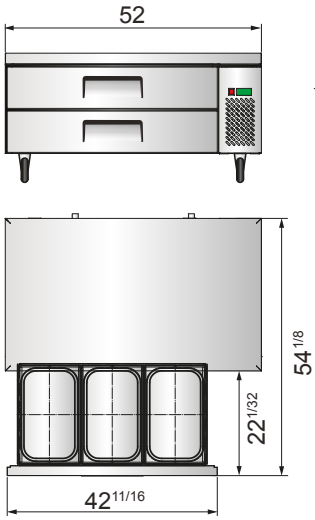

MGF8452GR

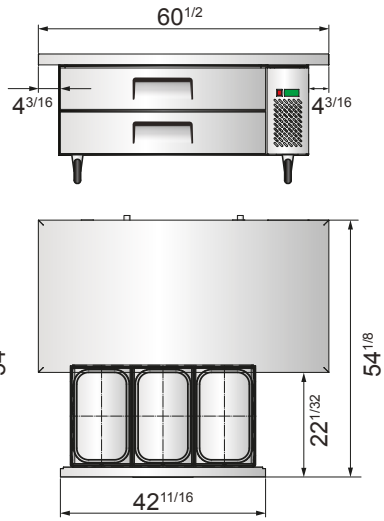

MGF8453GR

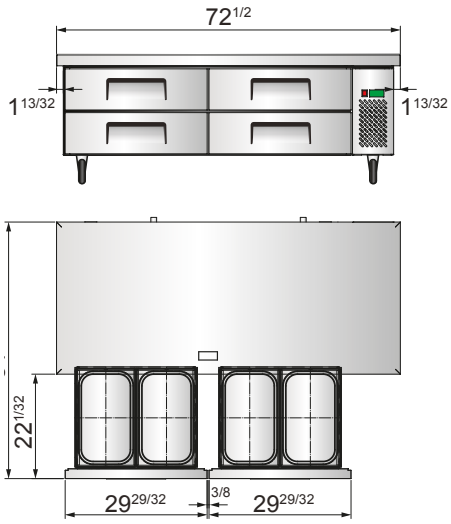

MGF8454GR

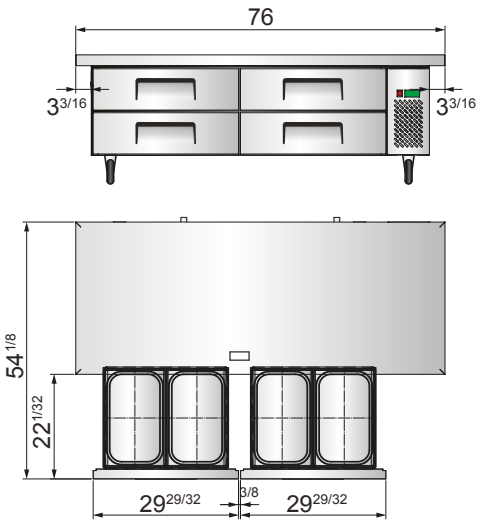
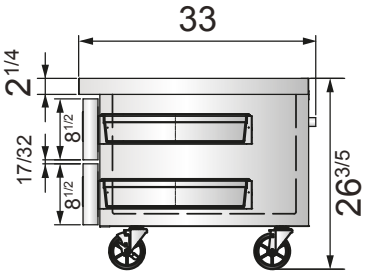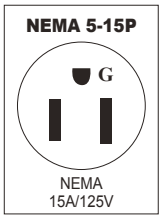
Side View