"WE MAKE THE KITCHEN BETTER!"
Toll Free: 855-855-0399 Email: info@atosausa.com
www.atosa.com | www.atosausa.com
California, Colorado, Florida, Georgia, Illinois,
Massachusetts, New Jersey, Ohio, Texas, Washington

Undercounter Freezers

MODELS:

MGF8405GR / MGF8405GRL
MGF36FGR / MGF8406GR

MGF8405GR(L)

MGF36FGR

MGF8406GR

Standard Features

- Stainless steel exterior & interior with reinforced stainless steel top
- Environmentally friendly R290 refrigerant
- Left hand hinge model available (MGF8405GRL)
- Electronic temperature controller
- Maintains temperatures between -8°F – -1°F
- Recessed door handle(s)
- Self-closing door(s) with stay open feature
- Magnetic door gasket(s) standard for positive door seal
- Pre-installed casters
- One(1) pre-installed shelf per section

Optional Accessories

- Extra shelves – includes 4 shelf clips per shelf
  MGF8405GR(L) shelf part #: W0402568
  MGF36FGR shelf part #: W0402713
  MGF8406GR shelf part #: W0402171

For the best results of food preservation we recommend setting your freezer between -8 °F to -1 °F

1. Don't forget to leave the unit some room to breathe!
2. Please clean the condenser frequently to give the unit more fresh air.

2 YEAR PARTS AND LABOR WARRANTY (US ONLY)
5 YEAR COMPRESSOR PART WARRANTY (US ONLY)

"WE MAKE THE KITCHEN BETTER!"
Toll Free: 855-855-0399 Email: info@atosausa.com
www.atosa.com | www.atosausa.com
California, Colorado, Florida, Georgia, Illinois,
Massachusetts, New Jersey, Ohio, Texas, Washington

SPECIFICATIONS

Models	Door	Capacity (Cu.Ft.)	Shelves	Casters (inch)	Amps (A)	Voltage (V/Hz/Ph)	HP	Refrigerant	Exterior Dimensions (inch)	Net Weight (lbs)	Gross Weight (lbs)
MGF8405GR(L)	1	7.2	1	2	1.8	115/60/1	1/5	R290	$27^{1/2}\times30\times34^{1/5}$	146	179
MGF36FGR	2	8.7	2	2	2.6	115/60/1	1/4	R290	$36^{3/8}\times30\times34^{1/5}$	172	222
MGF8406GR	2	13.4	2	2	2.6	115/60/1	1/4	R290	$48^{1/5}\times30\times34^{1/5}$	203	245

PLAN VIEW

MGF8405GR(L)

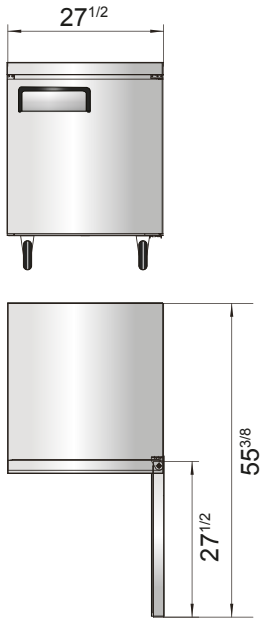

MGF36FGR

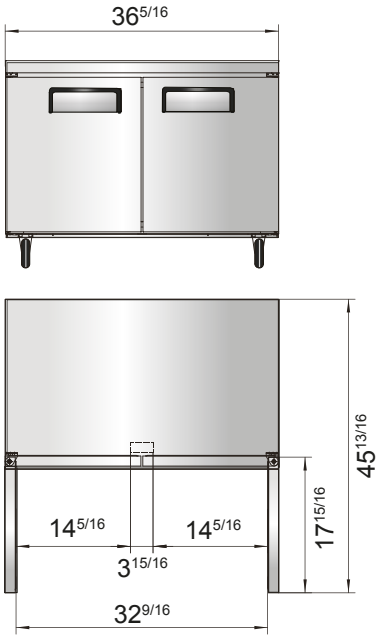

MGF8406GR

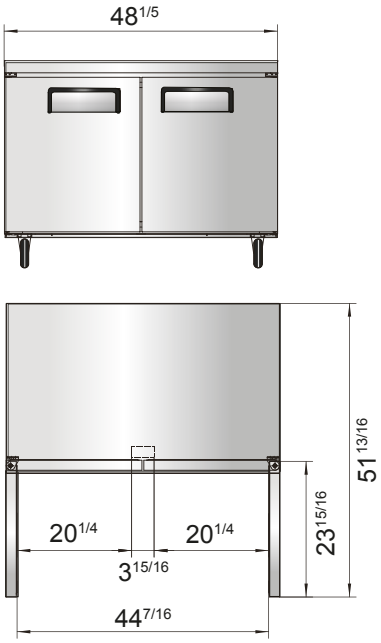

SIDE VIEW

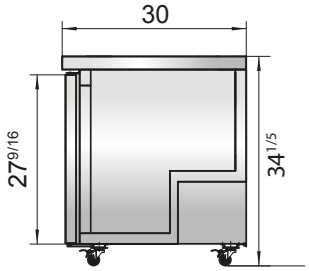

Casters

Epoxy shelves

Rear grate

Temperature control

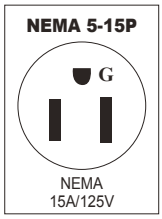

Atosa is continuously improving products. Specifications are subject to change without notice.